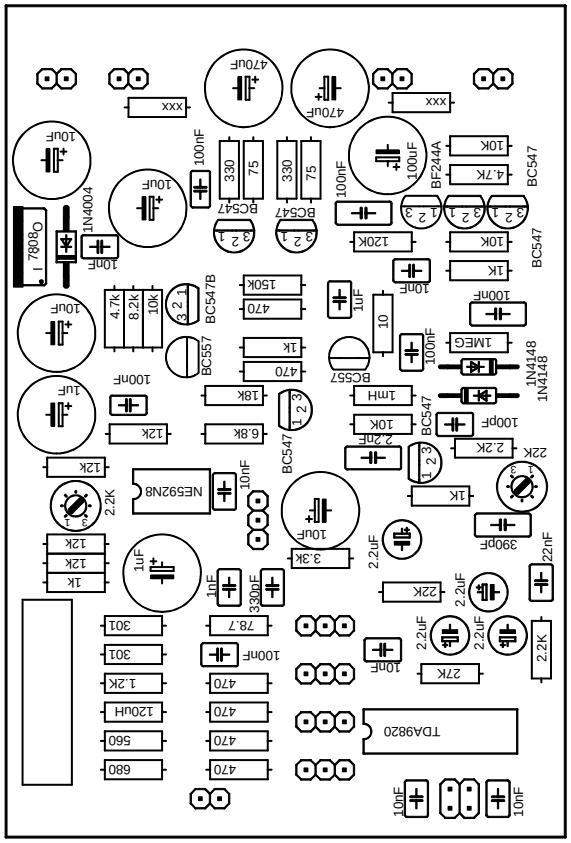

31/03/2007 17:05:57 D:\Nicolas\electronique\eagle\demvdoson\demvdosonV4b.brd